KIMO INSTRUMENTS

Technical Data Sheet

Pressure / Temperature / Humidity / Air Velocity / Airflow / Sound level

Cable temperature probe at angled resistive element with or without fitting

Type SFC 50

SFC 50 - SFCD 50 – SFCR 50 – SFCRD 50

GENERAL FEATURES

- Temperature probe mounted on conductive cables with angled stainless steel contact tip, with or without stainless steel fitting
- Measuring ranges (according to cable):
  From -50 °C to +400 °C (PT100 and PT1000).
  From -20 °C to +120 °C (NTC).
- **2** wires output (SFC, SFCR) or
  4 wires output (SFCD, SFCRD) for **NTC** and **PT1000.**
- **3-4** wires output (SFC, SFCR) or
  6 wires output (SFCD, SFCRD) for **PT100**.
- For other resistance types (PT25, PT50, PT500, PT200 or NI), please contact us.

TECHNICAL FEATURES

Operating temperature ***(according to cable)***	From -50 °C to +400 °C (PT100 and PT1000) From -20 °C to +120 °C (NTC)
Accuracy *	**PT100 or PT1000:** see "Tolerances" table **NTC:** see "Tolerances" table
Sensor type	**PT100 or PT1000:** class B, class A, 1/3 DIN, as per DIN IEC751 **NTC:** resistance at 25 °C, R_{25} = 10 KΩ Nominal Beta value B25/85 = 3.695K ±1%
Storage temperature	From -20 °C to +80 °C
Operating temperature of cable	**PVC**: from -40 °C to +120 °C (Shielded on request) **Silicone**: from -50 °C to +180 °C **PFA**: from -50 °C to +260 °C (Shielded on request) **Silk glass with stainless steel braid**: from -50 °C to +400 °C
Probe and connection	316 L stainless steel Bent at 90° (other on request) Watertight crimping with heat-shrink tubing (except for silk glass with standard mounting on stainless steel duct) Curve spring available as option
Connection thread	½' or ¼' gas
Connection mounting	**On L2 length (see drawing)**: 12 or 14 corresponding to ½' G and ¼' G connections **On L1 length (see drawing)**: 12L1 or 14L1 corresponding to ½' G and ¼' G connections

⚠ For Ø 4 mm, the 4 wires mounting is not available

SFC 50 & SFCD 50

Angled cable probe
in simple pair or multipair mounting

DIMENSIONS

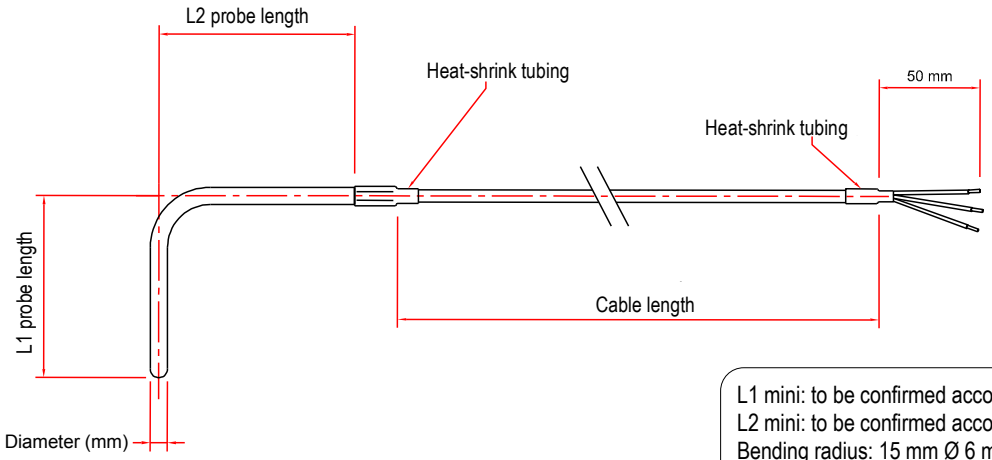

L1 mini: to be confirmed according to Ø
L2 mini: to be confirmed according to Ø
Bending radius: 15 mm Ø 6 mm
24 mm Ø 8 and 10 mm

PART NUMBER

• SFC 50 – Single pair probe

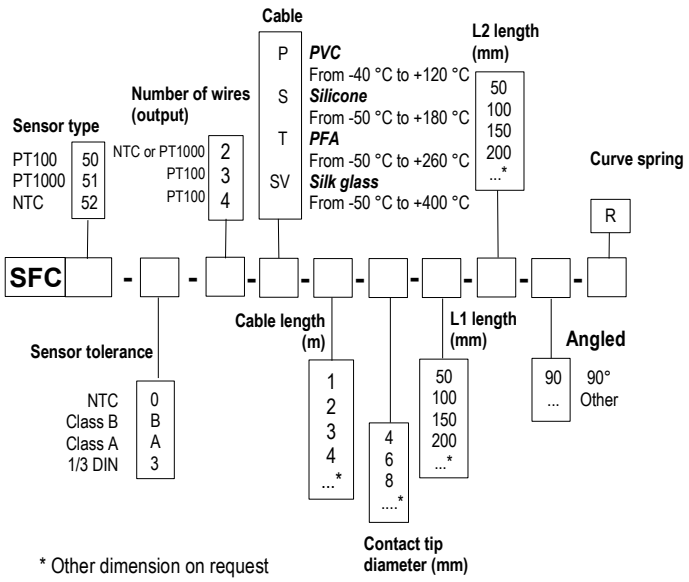

Example: SFC-51-B-2-P-1-4-100-100-90-R
Model: PT1000 temperature probe class B, 2 wires, PVC cable of 1 m length. Stainless steel contact tip Ø 4 mm angled at 90° and L1 and L2 lengths of 100 mm, with curve spring. **Measuring range from -40 to +120 °C.**

• SFCD 50 – Multipair probe

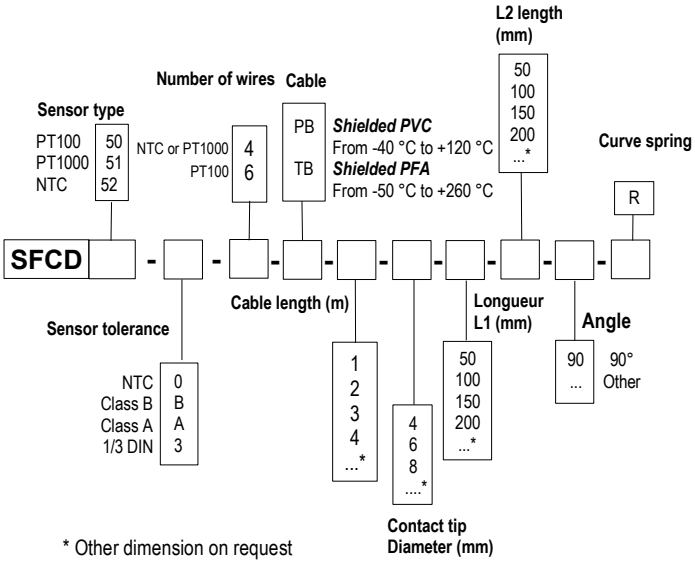

Example: SFCD-51-B-4-PB-1-6-100-100-90-R
Model: PT1000 temperature probe class B, 4 wires, shielded PVC cable of 1 m length. Stainless steel contact tip Ø 6 mm angled at 90° and L1 and L2 lengths of 100 mm, with curve spring. **Measuring range from -40 to +120 °C.**

SFCR 50 & SFCRD 50

Angled cable probe with fitting in simple pair or multipair mounting

DIMENSIONS

- With fitting on L1

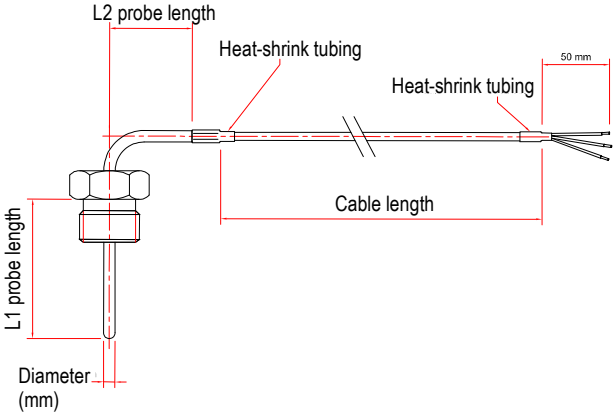

- With fitting on L2

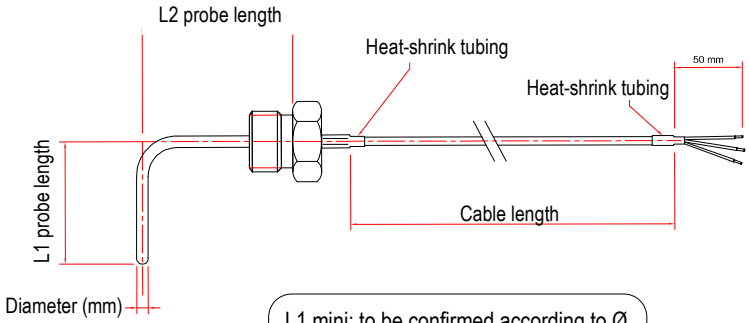

L1 mini: to be confirmed according to Ø
L2 mini: to be confirmed according to Ø
Bending radius: 15 mm Ø 6 mm
24 mm Ø 8 et 10 mm

PART NUMBER

• SFCR 50 - Single pair probe

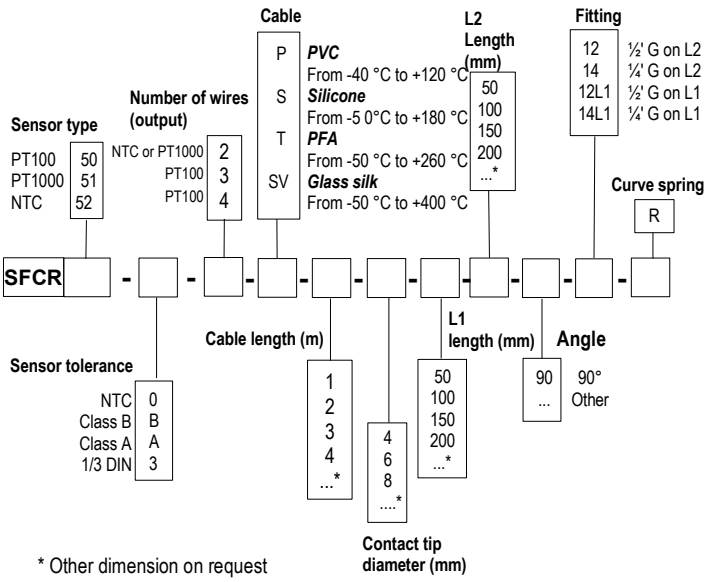

Example: SFCR51-B-2-P-1-4-100-100-90-12-R
Model: PT1000 temperature probe class B, 2 wires, PVC cable of 1 m length. Stainless steel contact tip Ø 4 mm angled at 90° and L1 and L2 lengths of 100 mm, with thread fitting ½' G fixed on L2, and with curve spring. **Measuring range from -40 to +120 °C.**

• SFCRD 50 - Multipair probe

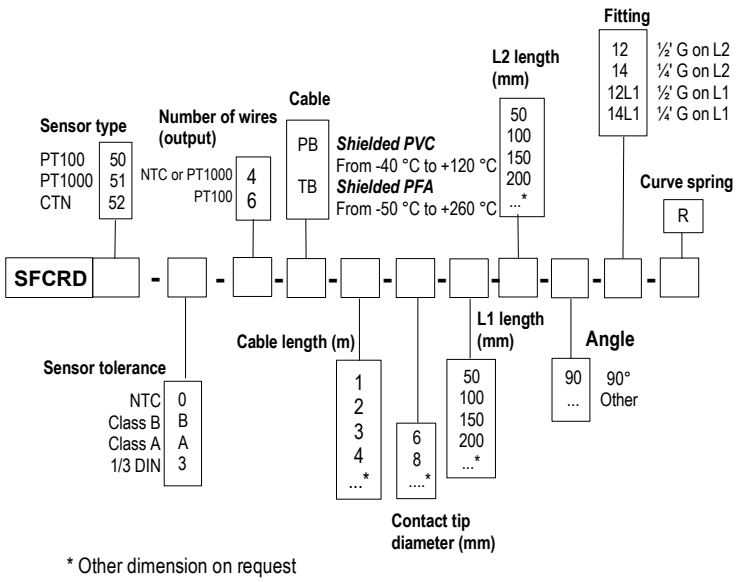

Example: SFCRD51-B-4-PB-1-6-100-100-90-12-R
Model: PT1000 temperature probe class B, 4 wires, shielded PVC cable of 1 m length. Stainless steel contact tip Ø 6 mm angled at 90° and L1 and L2 lengths of 100 mm,with thread fitting ½' G fixed on L2, and with curve spring. **Measuring range from -40 to +120 °C.**

TOLERANCES* OF PT100 AND PT1000 PROBES

As per IEC 751 (1993) norm.

Temp °C	Tolerances					
	Class B		Class A		1/3 DIN	
	± °C	± Ohms	± °C	± Ohms	± °C	± Ohms
-100	0.8	0.32	0.35	0.14	0.27	0.11
-50	0.55	0.22	0.25	0.1	0.19	0.08
0	0.3	0.12	0.15	0.06	0.1	0.04
100	0.8	0.3	0.35	0.13	0.27	0.1
200	1.3	0.48	0.55	0.2	0.44	0.16
300	1.8	0.64	0.75	0.27	0.6	0.21
400	2.3	0.79	0.95	0.33	0.77	0.26

Resistance values for Pt1000 (Ω) must be multiplied by 10 for the same corresponding temperature value (°C). For example: at 0 °C for Class B Pt1000 ± 0.3 °C → ± 1.2 Ω

TOLERANCES* OF NTC PROBES

Measuring range °C	Tolerances °C
From -20 °C to 0 °C	± 0.5 °C
From 0 °C to +70 °C	± 0.2 °C
From +70 °C to +100 °C	± 0.5 °C

* Performed in laboratory conditions, the above accuracies mentioned in this document will be guaranteed, provided that you use the calibration compensation data or identical calibration conditions.

ACCESSORIES (SEE RELATED DATASHEET)

- Transmitter output 4-20 mA or 0/10 V
- Wall mounting support
- Stainless steel mounting brackets
- 1/4, 1/2 gas screw nut
- Sliding connection
- PTFE or stainless. steel ferrule for compression fitting
- Sleeve to weld for food industry (with ½" G female)
- Stainless steel junction fitting
- ½ gas or NPT thread cuff
- Thermo-conducting silicone grease
- Calibration certificate
- Thermowell

www.kimo.fr

Distributed by :

EXPORT DEPARTMENT
Tel : + 33. 1. 60. 06. 69. 25 - Fax : + 33. 1. 60. 06. 69. 29
e-mail : export@kimo.fr